FORESTRY MULCHERS

# UMM/S

## Forestry mulchers for PTO tractors with fixed tooth rotor.

High productivity, robustness and maneuverability are the main strengths of this mulcher with a fixed rotor system. The UMM/S is a very versatile model for tractors between 180 and 350 hp. It has a mulching capacity of up 14 in diameter material. The well distributed weight allows for great maneuverability also in steep and sloppy applications. The alignment PTO system "W" connected to the central gearbox, allows for a wider working angle of the PTO shaft in all working conditions. This new model features the new counter-blade Spike PRO as standard equipment.

180-350 hp

Ø 14 in max

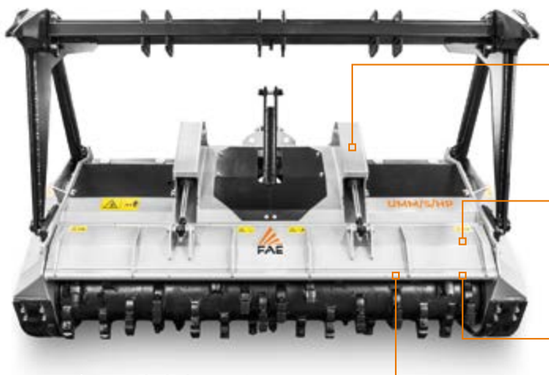

**Cylinder protection**
to prevent cylinder damage

**Reinforced hydraulic hood**
helps provide a finer product while being more durable

**Spike PRO counter-blade**
the distribution of the new Spike PRO counter-blades inside the shredding chamber guarantees a better finish of the mulched material

**Inner anti wear clad plates FCP**
absorbs wear while protecting the frame

**Z style self ranging system of the PTO drive shaft/gearbox**
always keeps the correct operating angle between the PTO shaft and the power take-off

**Bigger transmission**
for tractors with power up to 350 hp

**Adjustable extended 3 point linkage**
fits perfectly with any kind of tractor

## MAIN OPTIONS

**W style self aligning device between PTO drive shaft/gearbox**
allows the mulcher to work at several angles without damaging the PTO

**Mechanical/hydraulic push frame**
guides and pushes material away from carrier

**Additional ripper for push frame**
helps with the positioning of standing material while mulching

**Standard hydraulic clutch transmission**
protects the transmission at PTO engagement for smooth starting and improves machine performance

### STANDARD EQUIPMENT

| | |
|---|---|
| Hydraulic rear hood | Gearbox with freewheel |
| Adjustable extended 3 point linkage | PTO shaft with cam clutch |
| Enclosed machine body | Bolted-on rotor shafts (in forged steel) |
| Centralized greasing hub | Hydraulic top link |
| Hydraulic hoses integrated in the frame | Z style self ranging system of the PTO drive shaft/gearbox |
| Cylinder protection | Interchangeable bolted on spike PRO counter-blade |
| Dual row protection chains | Adjustable skids |
| Transmission with belts | Supporting service leg |

### OPTIONS

| | |
|---|---|
| Bolt-on chain's protection plates | Special skids to go underground |
| Hydraulic clutch transmission (UMM/S, UMM/S/HP-225 and UMM/S/HP-250) | Mechanical guard frame |
| Multiple tooth options | Hydraulic guard frame |
| W style self aligning device between PTO drive shaft/gearbox | Extra ripper for guard frame |
| IVT - CVT or creeper transmission strongly recommended | Forestry tires and carrier belly pan strongly recommended |

| MODEL | UMM/S-200 | UMM/S-225 | UMM/S-250 | UMM/S/HP-200 | UMM/S/HP-225 | UMM/S/HP-250 |
|---|---|---|---|---|---|---|
| **Engine** (hp) | 180-280 | 190-280 | 200-280 | 180-350 | 190-350 | 200-350 |
| **PTO** (rpm) | 1000 | 1000 | 1000 | 1000 | 1000 | 1000 |
| **Working width** (in) | 81 | 91 | 100 | 81 | 91 | 100 |
| **Total width** (in) | 98 | 108 | 117 | 98 | 108 | 117 |
| **Weight including rotor** type C/3 (lbs) | 6482 | 6768 | 7077 | 6570 | 7297 | 7606 |
| type B/3 (lbs) | 7165 | 7408 | 7760 | 7231 | 7893 | 8532 |
| **Rotor diameter** (in) | 23.4 | 23.4 | 23.4 | 23.4 | 23.4 | 23.4 |
| **Max shredding diameter** (in) | 14 | 14 | 14 | 14 | 14 | 14 |
| **No. teeth** type B/3+C/3/SS | 72+2 | 80+2 | 92+2 | 72+2 | 80+2 | 92+2 |
| type C/3+C/3/SS | 44+2 | 50+2 | 56+2 | 44+2 | 50+2 | 56+2 |

*Data refers to machine as standard set-up. Options may have reflects on weights and dimensions. The technical data in this catalogue may be altered without prior notice.*

### ROTOR TYPE B

**TOOTH B/3**
(standard)

**TOOTH B/3/HD**
(option)

### ROTOR TYPE C

**TOOTH C/3**
(standard)

**TOOTH C/3/HD**
(option)

**TOOTH K/3**
(option)

**TOOTH C/3/SS**
(side scraper)